FerroTec RMT

Thermoelectric module
TM-127-1.0-3.0

FerroTec

TECHNICAL DATA

U_{max}	14.3 V	T_{hot}=25°C Dry air
Q_{max}	31.0 W	
ΔT_{max}	68°	
I_{max}	3.5 A	
ACR at 25°C	3.77 Ohm	
Hot side	Ceramics Al_2O_3, white 96%	
Cold side		
Max. processing temperature	Depends on chosen solder type	
Standard tolerances for thermal and electrical parameters ±10%		

MODULE DRAWING
standard design

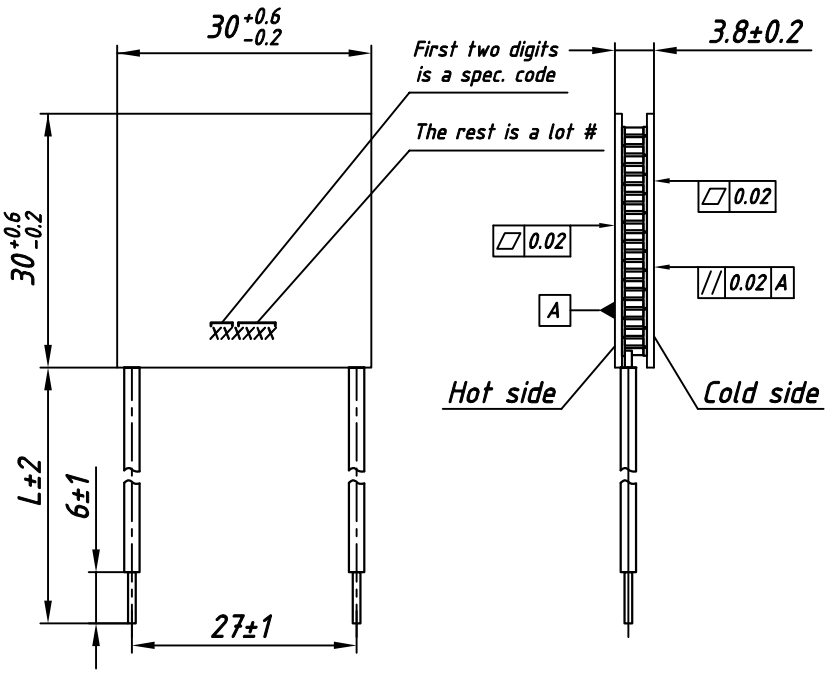

STANDARD ORDERING OPTIONS

№	Option	Parameter		
1	Lead wires	AWG №		
		20	22	24
2	Lead wires length	L - under customer request		
3	Lead wires insulation	Type / Max. processing temp.		
		Without insulation / See solder type m.p.t		
		PVC / 105° C		
		Silicone / 180° C		
		PTFE / 200° C		
4	Internal solder	Type / Max. processing temp.		
		Type-1 / 138° C		
		Type-2 / 227° C		
		Type-3 / 232° C		
		Type-4 / 290° C *		
5	Anticorrosional coating	yes	no	
6	Sealing	Type / Max. processing temp.		
		Without sealing / 200° C		
		Epoxy / 130° C		
		Silicone / 180° C		

AVAILABLE MODIFICATIONS

Design	Description
TM-127-1.0-3.0 M	High reliable version on cold side

OPTIONS UPON REQUEST

Height tolerance	± 0.02
Unflatness and nonparallelism	± 0.02

- Solder type marked * is not compliant to RoHS (2002/95/EC)
- For another options consult of our tecnical support engineers

RMT Ltd.
www.rmt-tec.com
e-mail: info@rmtltd.ru
Phone: +7 (499) 678-20-82
Varhavskoe highway 46, 115230 Moscow, Russia